15.12.17 ID: 0257
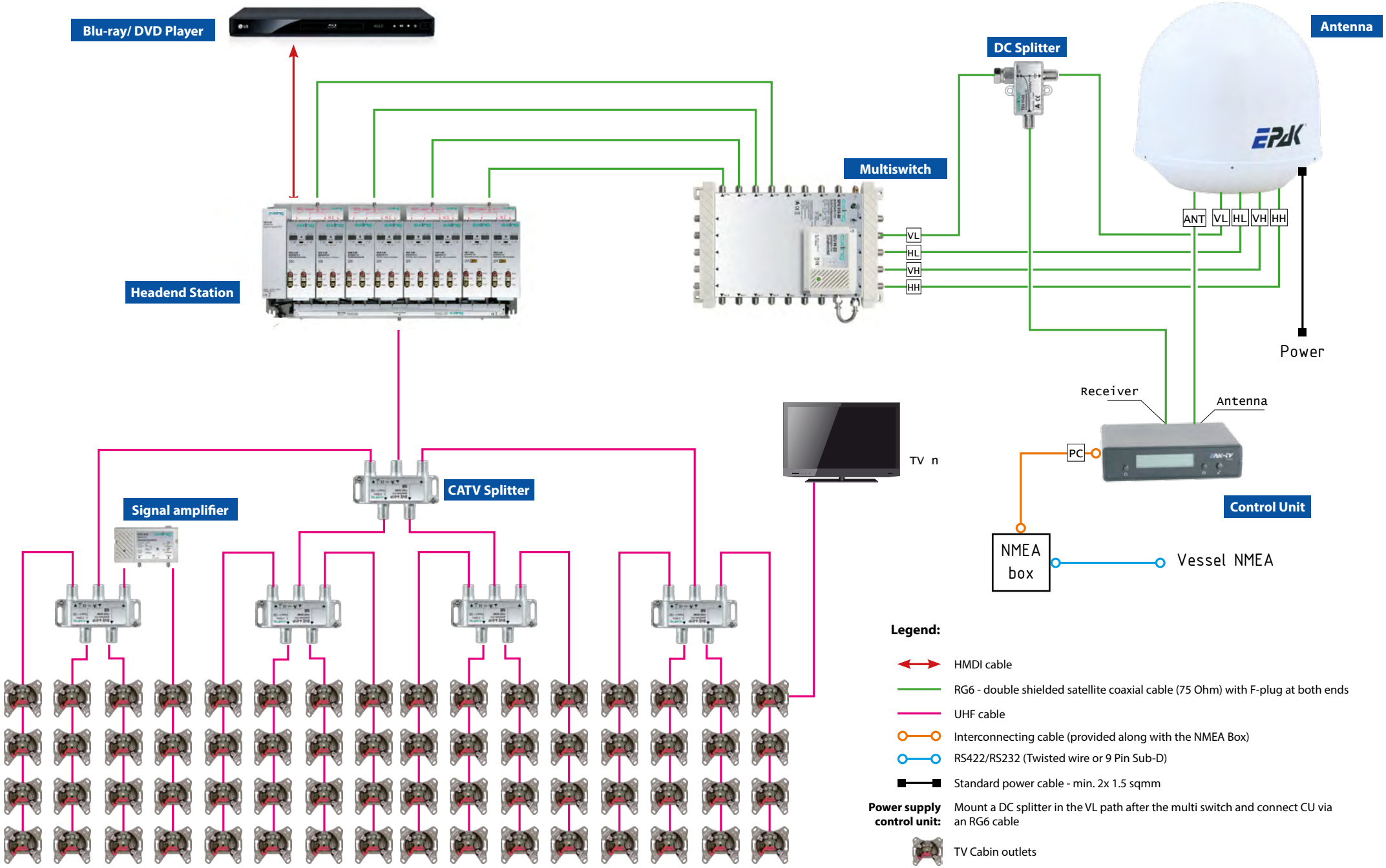
Wiring TVRO Quattro Antenna with Modular Headend Station