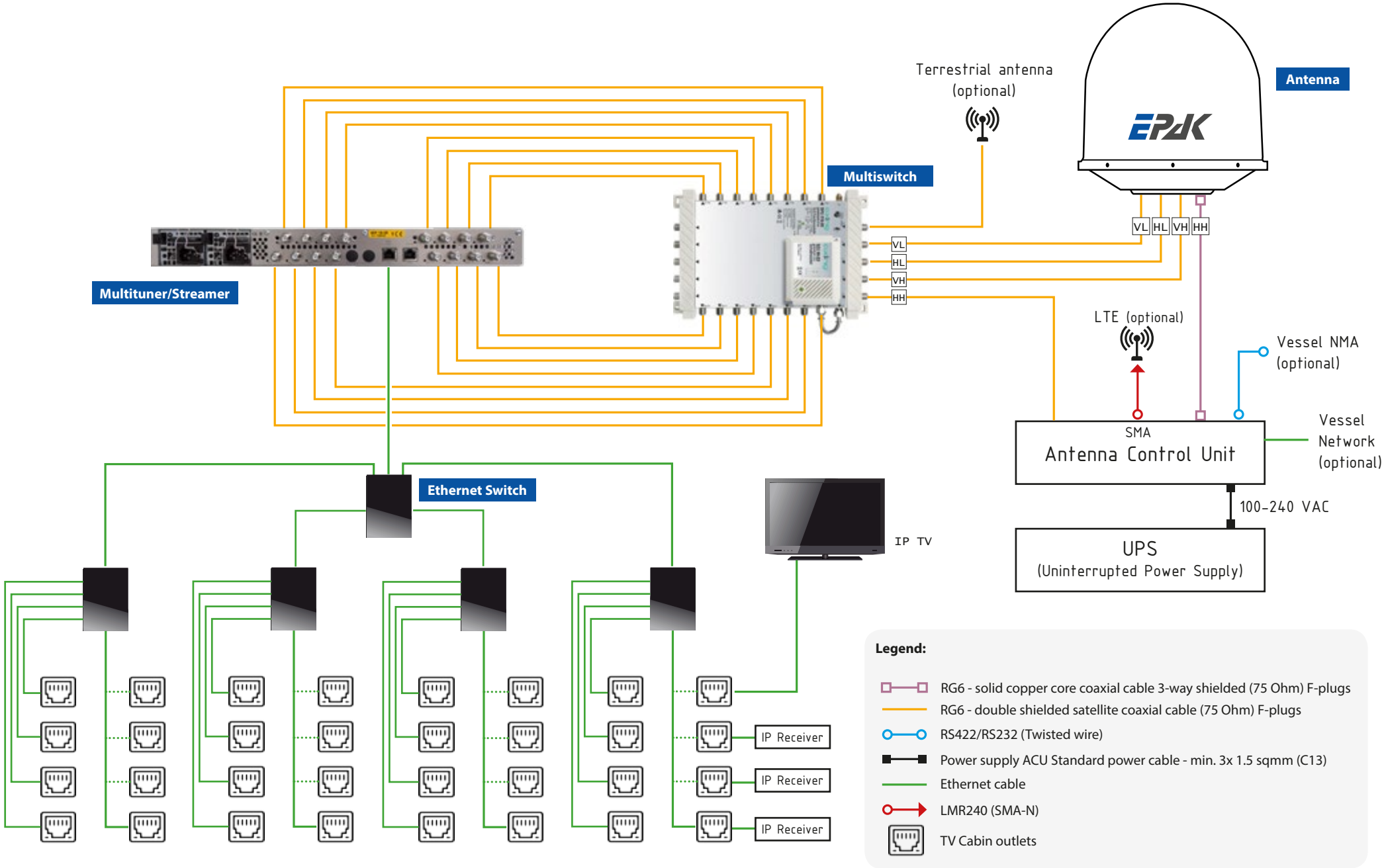Wiring TVRO Quattro Antenna with Headend Station (IPTV)