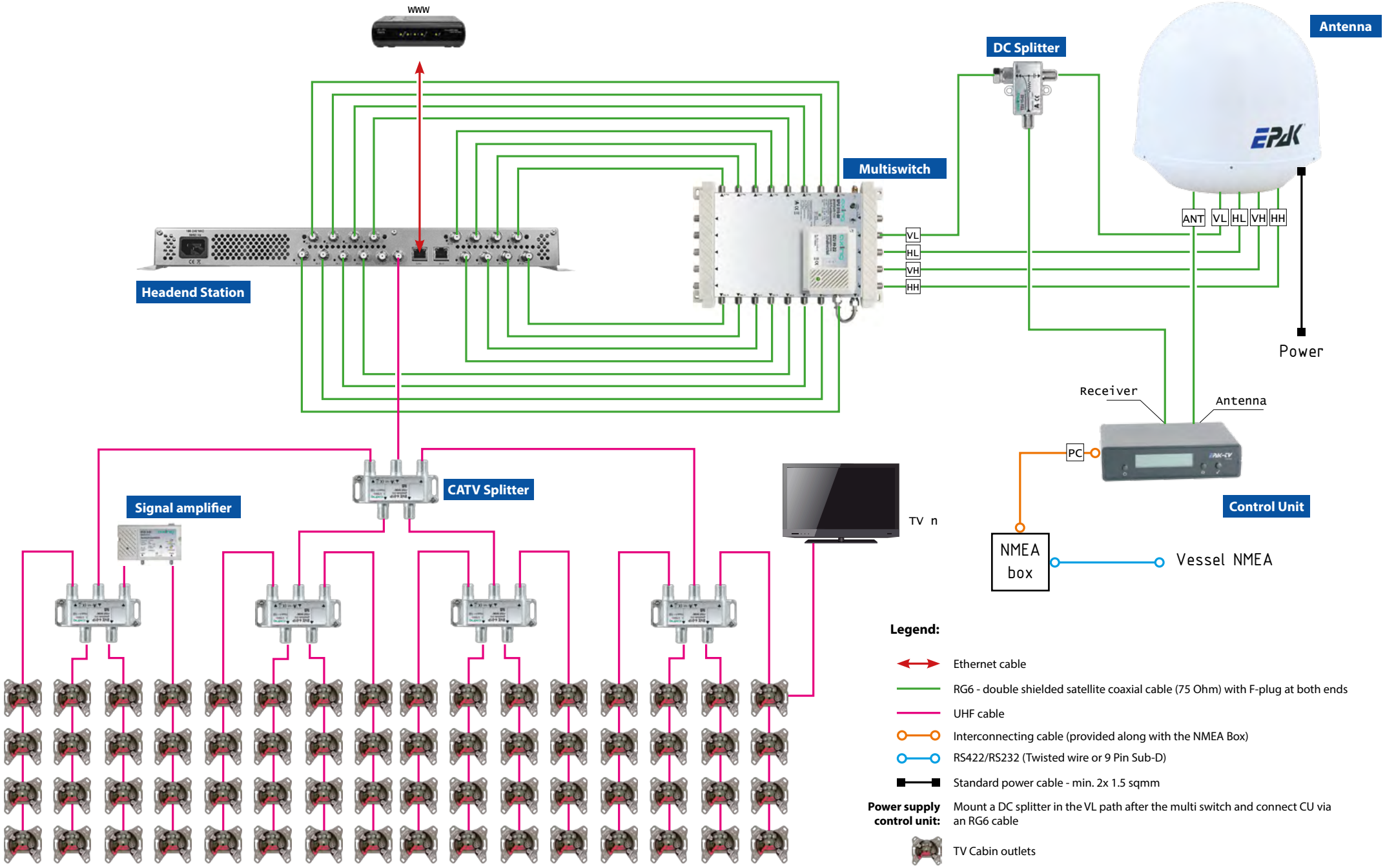Wiring TVRO Quattro Antenna with Compact Headend Station